Material to be chosen in
correlation to frame material

The Information contained herein is intended to be public domain.
However may be performed only by the issuer of this print.
Product not in compliance to the specifications contained herein will be considered incompatible with standardized design.

The drawings shown here are no product drawings.
They are to be used as reference documents
for the determination of final product specifications only.
These final specifications are the responsibility
of the manufacturer who intends to comply with this geometry.

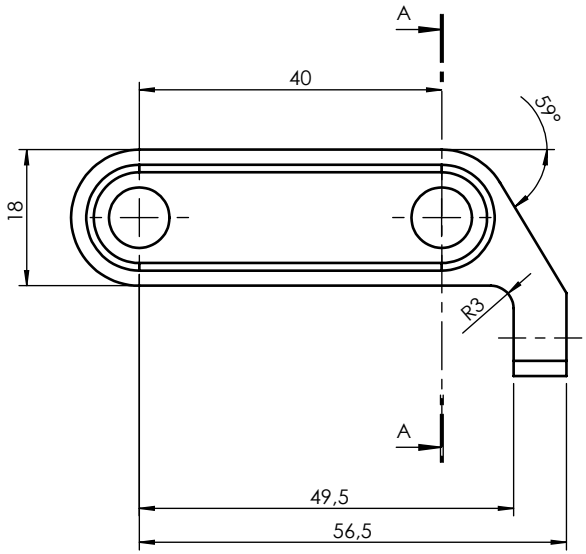

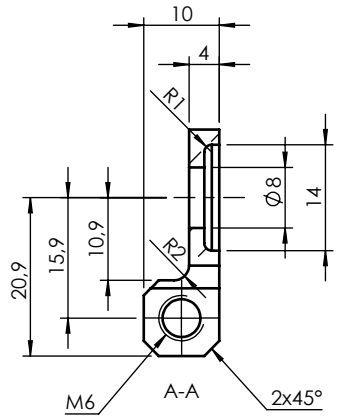

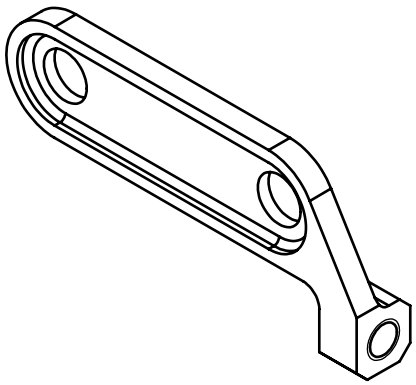

UniversalTransmissions®

© bei Übermittlung schutzfähiger Informationen behält sich
KARLHEINZ NICOLAI KÜLFTALSTR: 18
31093 LÜBBRECHTSEN - GERMANY
alle Rechte für den Fall der Patentierung vor.
Jede Verfügungsbefugnis, wie Kopier- und Weitergaberecht, bei uns.
© In case of communicating patentable information
all rights arising in the event of a patent grant remain with
KARLHEINZ NICOLAI KÜLFTALSTR: 18
31093 LÜBBRECHTSEN - GERMANY.
All rights of disposition, particularly for
copying or distributing, are reserved.
The English translation is believed to be accurate.
In case of discrepancies the german version shall govern.

UNLESS OTHERWISE SPECIFIED

DIMENSION ARE IN MILLIMETTERS
TOLERENCE ON

0 PLACE	2 PLACE	ANGLES
#0,5	#0,15	# 1°
1PLACE	3 PLACE	
# 0,25	# 0,05	

THIRD ANGLE PROJECTION

MANUAL ☐ CAD ☐

CADRA ☐
AUTOCAD ☐
CADKEY ☐
SOLIDWORKS ☒
UNIGRAPHICS ☐
CATIA ☐
IDEAS ☐

DRAWN IN ACCORDANCE WITH ASME 14. 5M - 1994

CAD FILE

DESIGNER: B. SCHLINGM.

DATE 16-09-2009

MANAGER: K.NICOLAI

PROGRAM:

REF

PRODUCTION

Gates® CARBON DRIVE SYSTEM

TITLE:

MU-RADO-L-TE
Belt Tensioner Left.IGS

SIZE A4

PART NO.

SCALE:1:1

SHEET 1 OF 1